CITY OF WATERTOWN
Historic District Commission

The Historic District Commission of the City of Watertown will hold a remote public meeting on the Fourth Thursday of February, on the 24th of 2022 at 7:00 p.m. in accordance with the Governor's Order Suspending Certain Provisions of the Open Meeting Law, G. L. c. 30A, § 20, relating to the 2020 COVID-19 emergency and to avoid group congregation, this meeting has only remote opportunities for participation with public access provided as follows:

HISTORIC DISTRICT COMMISSION MEETING
THURSDAY, FEBRUARY 24, 2022 AT 7:00 PM
AGENDA

ACCESS INFORMATION:

A. The meeting will be televised through WCATV (Watertown Cable Access Television): http://vodwcatv.org/CablecastPublicSite/?channel=1

B. The Public may join the virtual meeting online:**https://watertown-ma.zoom.us/j/95648117955**

C. Public may join the virtual meeting audio only by phone: (877) 853-5257 or (888) 475-4499 (Toll Free) and enter
Webinar ID:920 9046 3343#

D. Public may comment through email: sjenness@watertown-ma.gov

---

1. Acceptance of Minutes
   A. Review of Minutes from the December 16, 2021 Historic District Commission Meeting
2. Public Hearing
   A. **11 Marshall St-** to consider the Certificate of Appropriateness application submitted for the proposed removal of the existing rotted fence and replace it with a cedar fence with lattice trim and a gate, two feet taller. Anna Yoo and Guido Guidotti, Applicants/Owners
3. Public Hearing
   A. **134 Mt. Auburn St**- to consider the Certificate of Appropriateness application submitted for the proposed removal of the existing landscape lighting, which model no longer exists and replace them with a similar model. Kaming Tam and Phil Horwitz, Applicants/Owners
4. Public Hearing
   A. **155A Mt. Auburn St**.- for the proposed removal of signage and installation of new illuminated signage for barber shop on a plastic composite panel, replacing dilapidated

plywood. Janier Rodriguez, Applicant, Maritza Marsoubian, Owner

5. Elections 2022
   A. Elections for Officers of the Historic District Commission
6. Solar Installations
   A. Discussion of best practice for installation of solar systems within the historic district. Includes a discussion of a request for a Certificate of Non-Applicability for a solar system at Marshall Place
7. Agent Report
   A. Updates for the members of the Historic District Commission

January 7, 2022

Town of Watertown

Administration Building
149 Main Street
Watertown, Massachusetts 02472
Historic District Commission
Tel: (617) 972-6426 • Fax: (617) 972-6484

HDC 2022-01

Filing Number: _____

As owner or authorized trustee of the property at 11 Marshall St in Watertown, Massachusetts, I hereby make application to the Watertown Historic District Commission for issuance of a Certificate of (check one): (✓) Appropriateness, (✓) Nonapplicability, or ( ) Hardship for the alteration, construction, or demolition described below:

Remove existing, rotting fence from backyard abutting the driveway. Change the height of the fence from 4' to 6' tall, 6 = 4' solid (SAME) plus 2' lattice at the top. The material will be CEDAR. The gate will be centered between the bulkhead and the shed underneath a CEDAR ARBOR that exists in the backyard.

If this is an application for a fence and/or a sign, please obtain review and sign-off from:

Zoning Enforcement Officer _____ Inspector of Building _____

Name of Property Owner or Condo Trust of Record: Guido Guidotti, Anna Yoo 11-13 Marshall St. Trust

Mailing Address: 11 Marshall St.

Telephone: (617) 851-1819 (Anna) Fax: _____

Email: Anna_yoo@verizon.net

Signature of Property Owner or Authorized Condo Trustee of Record (Required):

Name of Applicant, if not Record Owner: _____

Mailing Address: _____

Telephone: _____ Fax: _____

Email: _____

11 Marshall Street proposal to replace/change backyard fence

January 7, 2022

The existing backyard fence was contructed from pressure-treated wood, as shown in the first two photos. It is in disrepair, especially the side that faces the driveway. The 17.5'-wide section we would like to replace is at the rear of our house, 42' from the sidewalk, but still visible from the street. The fence does not block the view of the historic house, though it may partially obscure the view of the 2001 rear addition.

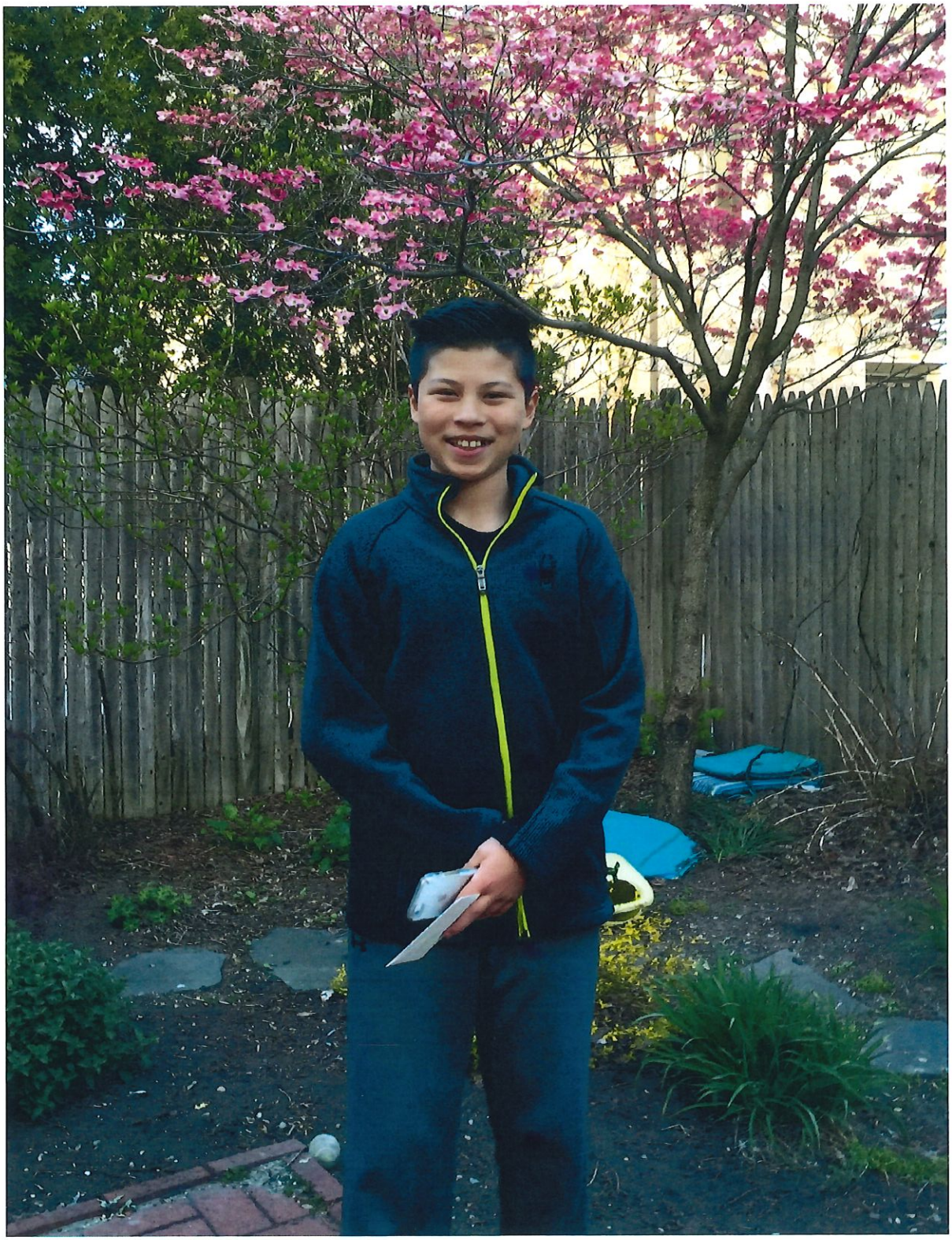

The gate is rotting, and our late dog tried to dig under, through, and jump over the fence and gate. We patched a hole in the gate, but the repair was not stable. In this 3rd photo, you can see the dog barking at the photographer through the hole.

The section was 4' tall, in contrast to the sides and rear fence sections, which are 6' tall. We propose to replace the 4' tall section with 4' **cedar** solid panels topped by 2' lattice. The extra 2' would prevent our dog from jumping over the fence, as our dog was known to clear about 5' when excited. The lattice would provide some additional privacy but also some visual openness. The lattice photo is not to scale, but it provides a visual of the square lattice (rather than diamond).

The cedar arbor was assembled by the owner from a kit and placed in the backyard last year. We moved that to the section of fence to frame the gate. While the arbor is 7.5 feet on the ground, it would need to be sunk slightly into the ground in order to stabilize it. We anticipate the final height of the arbor to be 7' 2".

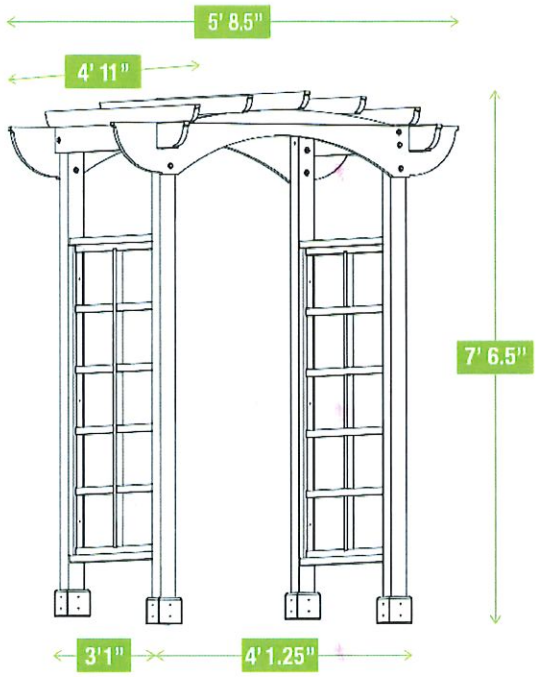

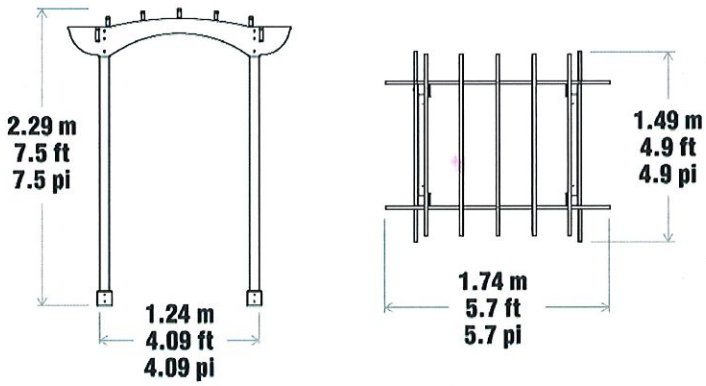

We believe that our proposal meets criteria for the Watertown Historic District. We are improving the building materials from pressure-treated wood to cedar. We would increase safety and preserve visibility by increasing the height of the fence by adding a lattice top. A functional gate will add security. Because this fence is 42' away from the street, behind our driveway and not in front of our house, we believe that the increased height will not have significant visual impact.

We have hired a Watertown fence company, Ideal Fence, for this project.

11 Marshall Street proposal to replace/change backyard fence

The existing backyard fence is 6′ tall pressure-treated wood. It is in disrepair, and we are applying to replace it. There are three main changes:

1. For driving visibility and ease of snow removal, we would like to remove the section of fence closest to the street. Currently it is 9 feet from the sidewalk, and we would like to remove the 8 foot section so that the fence begins 17 feet from the sidewalk, beginning where the mature arborvitae from the neighboring property.
2. The 6′ tall solid back and side fencing would be replaced with 6′ tall cedar solid fencing.
3. The side that abuts the driveway will comprise the most change. The 17.5′-wide section we would like to replace is at the rear of our house, 42′ from the sidewalk, but still visible from the street. The fence does not block the view of the historic house, though it may partially obscure the view of the 2001 addition.

The gate is rotting, and our late dog tried to dig under, through, and jump over the fence and gate. We patched a hole in the gate, but the repair was not stable. In the following photo, you can see the dog barking at the photographer through the

hole.

The section was 4′ tall. We propose to replace it with 4′ cedar solid panels topped by 2′ lattice. The extra 2′ would prevent our dog from jumping over the fence, as our dog was known to clear about 5′ when excited. The lattice would provide some additional privacy but also some visual openness. The lattice photo is not to scale,

but it provides a visual of the square lattice (rather than diamond).

The cedar arbor was assembled and place in the backyard last year. We moved that to the section of fence to frame the gate. While the arbor is 7.5 feet on the ground, it would need to be sunk slightly in order to stabilize it. We anticipate the final height of the arbor to be 7′ 2″.

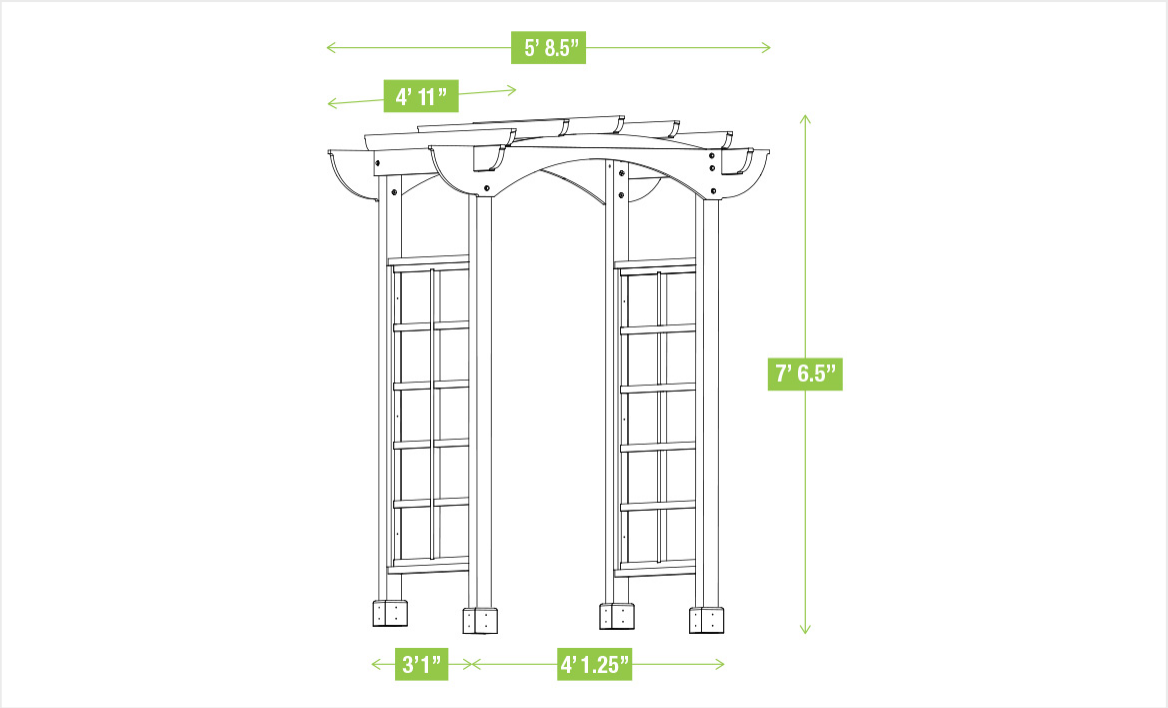
5' 8.5"
4' 11"
7' 6.5"
3'1"
4' 1.25"

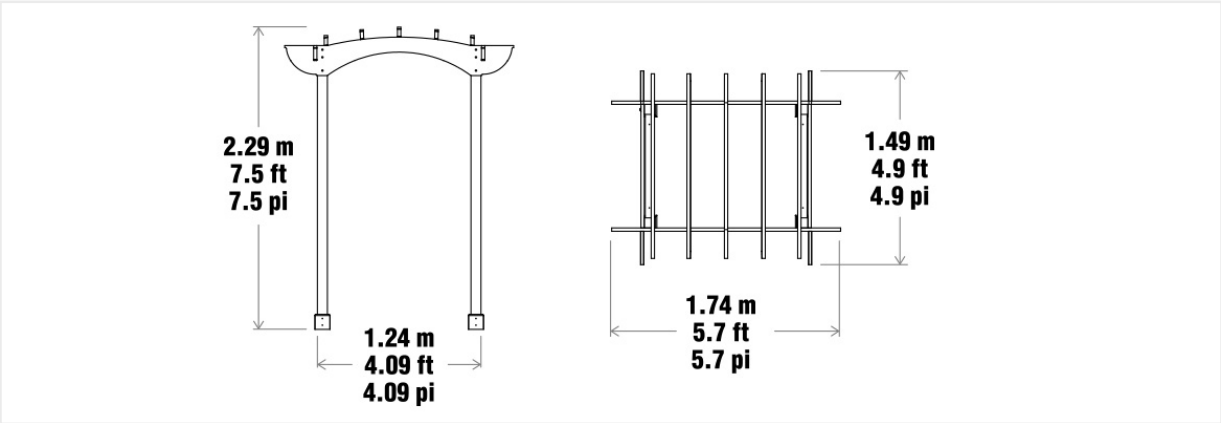
2.29 m
7.5 ft
7.5 pi
1.24 m
4.09 ft
4.09 pi
1.49 m
4.9 ft
4.9 pi
1.74 m
5.7 ft
5.7 pi

We believe that our proposal meets criteria for the Watertown Historic District as we are improving the building materials from pressure-treated wood to cedar. We would increase safety and preserve visibility by increasing the height of the fence by adding a lattice top. A functional gate will add security. Because this street-facing fence wall is 42′ away from the street behind our driveway and not in front

of our house, we believe that the increased height will not have significant visual impact.

We have hired a Watertown fence company, Ideal Fence, for this project. Below is an estimate for the side of the fence that abuts the driveway, #3 above.

CHAINLINK • ORNAMENTAL WROUGHT IRON • VINYL • CUSTOM WOOD • SHEDS • PRESTAINING
GUARD RAILS HAND RAILS

anna_yoo@verizon.net

IDEAL FENCE, INC.
FREE ESTIMATES

No. 6240

370 PLEASANT STREET
WATERTOWN, MA 02472
TEL (617) 924-7975 • FAX (617) 923-4213 • MOBILE (617) 594-6870
WWW.IDEALFENCE.COM

Bill To: Anna Yoo
617 11 MARSHALL ST
851 WATERTOWN, MA 02472
1817

Job Site: SAME

50% Deposit Required And Balance Due Upon Completion Of Work

SEP 23, 21

Description

Terminal Post
1 5/8" 2" 2 1/2" 3" 4"

Line Post
1 5/8" 2" 2 1/2"

Top Rail
1 3/8" 1 5/8"

Bottom Rail
Yes No

Fence Finish Side
Customer Neighbor

Disposal of Old Fence
Yes No

Clear the Line
Yes No

Flat Grade
Yes No

Step the Fence
Yes No

Wood Post
Cedar Pressure Treated

Backer Rails
Round Square

Kick & Facia
Yes No

Kick & Bottom
Yes No

Post Top
Pyramid Classic Cambered

Scalloped
Yes No

Estimate FOR
Installing existing
wood ARBOR.
FOOR 5"x5" Pressure
treated POST.
14' OF 4'6" 1"x4" Cedar
board TOPPED with
18" OF Square lattice
work, one gate in
arbor.

$ 260000

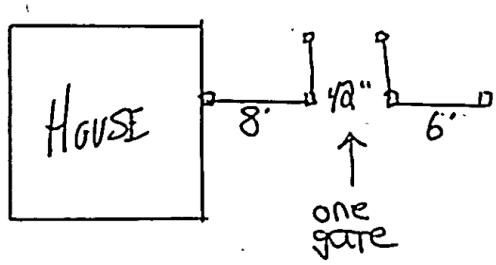

☐ PROPOSAL ☐ INVOICE
MARK NILAN CELL (617) 594-6866
EMAIL: MARKNILAN@COMCAST.NET

TOTAL $ 260000

January 18, 2022

Town of Watertown

Administration Building
149 Main Street
Watertown, Massachusetts 02472
Historic District Commission
Tel: (617) 972-6426 • Fax: (617) 972-6484

HDC 2022-02

Filing Number: _____

As owner or authorized trustee of the property at **Mount AuburnVillage Condominium** known as **128, 130 and 134 Mount Auburn Street and 18,20, 22, and 24 Common Street**

in Watertown, Massachusetts, I hereby make application to the Watertown Historic District Commission for issuance of a Certificate of (check one): ( ) Appropriateness, ( ) Nonapplicability, or ( ) Hardship for the alteration, construction, or demolition described below:

Replacement of landscape lighting. The lighting to be replaced is around 128 and 130 Mount Auburn Street and the Common Street properties. The existing landscape lighting has no historical significance. It is believed that the existing landscape lighting was installed when 134 Mount Auburn Street, formerly a church built in 1899, and 128 and 130 Mount Auburn Street, the parish house, were converted to a condominium about 10 years ago. The buildings with Common Street addresses were built about 10 years ago.

The existing landscape lighting is corroding and replacements are no longer available. A picture of the existing lighting is attached as Exhibit A.

A picture of the proposed replacement light is attached as Exhibit B. They will be placed where the existing lights are located and in no other locations.

If this is an application for a fence and/or a sign, please obtain review and sign-off from:

_____ Zoning Enforcement Officer

_____ Inspector of Building

Name of Property Owner or Condo Trust of Record:
Mount AuburnVillageCondominiumTrust

Mailing Address: **Unit 9, 134 Mount Auburn Street, Watertown, MA 02472**

Telephone: 617-309-0915 Fax: _____

Email: ktam1900@gmail.com

Signature of Property Owner or Authorized Condo Trustee of Record (Required):

Kaming Tam KAMING TAM

Name of Applicant, if not Record Owner: _____

Mailing Address: _____

Telephone: _____ Fax: _____

Email: _____

EXHIBIT A

EXHIBIT B

Town of Watertown

Administration Building
149 Main Street
Watertown, Massachusetts 02472
Historic District Commission
Tel: (617) 972-6426 • Fax: (617) 972-6484

Filing Number: _____

As owner or authorized trustee of the property at 155A MT. AUBURN STREET in Watertown, Massachusetts, I hereby make application to the Watertown Historic District Commission for issuance of a Certificate of (check one): ( ) Appropriateness, ( ) Nonapplicability, or ( ) Hardship for the alteration, construction, or demolition described below:

INSTALLATION OF A ILLUMINATED SIGN FOR A BARBERSHOP,(JANIER BARBER SHOP) SAME LOCATION AS PRIOR SIGNAGE ON THIS PARTICULAR SPACE.

If this is an application for a fence and/or a sign, please obtain review and sign-off from:

Zoning Enforcement Officer _____ Inspector of Building _____

Name of Property Owner or Condo Trust of Record: 155 MT Auburn ST. LLC

Mailing Address: 15 IVY LANE, WALTHAM, MA 02452

Telephone: 781-330-3358 Fax: _____

Email: marsoubian@hotmail.com

Signature of Property Owner or Authorized Condo Trustee of Record (Required):

Name of Applicant, if not Record Owner: NAJARIAN LOUISE TRUSTEE or Marita Marsoubian TRUSTEE

Mailing Address: 15 IVY LANE, WALTHAM, MA 02452

Telephone: 781-330-3358 Fax: _____

Email: marsoubian@hotmail.com

O:\Clerk Files\Historic District\HDC Forms for Filing an Action\HDC Application-2014.doc

Instructions for Completing this Application

You live in the Mount Auburn Street Historic District. A Certificate is required before obtaining any building permit or before proceeding with alteration or construction projects affecting the exterior of the property open to view from a public street, public way, public park or public body of water. This application must be filed with the Watertown Historic District Commission (c/o Watertown Historic District Commission office, Town of Watertown Administration Building, 149 Main Street, Watertown, MA 02472).

The following information is required for **ALL** applications:

- ☒ Written description of the work to be done, including any anticipated repair or replacement for related rehabilitation (use application form provided).
- ☒ Photographs of existing conditions as seen from a public way.
- ☒ Schedule of materials and colors (may be described on plans and elevations).
- ☐ Manufacturer's brochures with illustrations and specifications for new materials.
- ☐ Information in sufficient detail for the Commission to visualize and understand the scope of work of all proposed construction, alteration, or demolition. When applicable, include detailed, dimensioned elevations and/or plans. Please submit plans no larger than 11" x 17" format.

In addition, the following are also required for applications for new structures and for additions:

- ☐ Certified plot plan of existing site, including a dimensioned footprint of all existing buildings, parking areas, and driveways.
- ☐ Streetscape elevation at 1/8th scale showing relative heights and distances of the surrounding buildings in comparison with any proposed new construction.

An application is considered incomplete without sufficient accompanying plans and drawings. **Incomplete applications will be returned to the applicant and will not be scheduled for Commission review.** Completed applications should be returned to the Commission office by the application deadline (see filing schedule).

Public Notices

The Commission shall place public notices in a newspaper of general circulation at the expense of the Applicant. The Applicant will be billed directly by the newspaper.

Certificates

A Certificate must be issued before a building permit can be obtained and before work can begin in the Mount Auburn Street Historic District. The approved Certificate shall expire one year from the time of issuance unless otherwise extended by the Commission.

Alterations Exempt from Full Commission Review

The following types of categories, structures or architectural features are exempt from full Commission review, **but nonetheless require a completed application and the issuance of a Certificate of Nonapplicability:**

1. Terraces, walks, sidewalks, driveways, street lighting and traffic lighting provided that any such structure is substantially at grade level;

2. Storm doors and storm windows, screens, and window air conditioners;

3. The color of paint;

4. The color of materials used on roofs; and

5. The reconstruction, substantially similar in exterior design, of a building, structure or exterior architectural feature damaged or destroyed by fire, storm or other disaster, provided such reconstruction is begun within one year thereafter and carried forward with due diligence;

6. The ordinary maintenance, repair or replacement of any exterior architectural feature which does not involve a change in design, material, or the outward appearance thereof or landscaping with plants, trees or shrubs.

Definitions:

To alter, alteration: To rebuild, reconstruct, restore, remove, demolish or other similar activities, including a change in exterior color.

Building: A combination of materials forming a shelter for persons, animals or property.

Certificate of Appropriateness: The certificate issued by a commission if it determines that the construction or alteration for which an application for a certificate of appropriateness has been filed will be appropriate for or compatible with the preservation or protection of the district.

Certificate of Non-applicability: The certificate issued by a commission if it determines that the construction or alteration for which a certificate of appropriateness or a certificate of non-applicability has been filed does not involve any exterior architectural feature or involves an exterior architectural feature which is not subject to review by the commission.

Certificate of Hardship: The certificate issued by a commission if it determines that owing to conditions especially affecting the building or structure involved, but not affecting the historic district generally, failure to approve an application will involve a substantial hardship, financial or otherwise, to the applicant and such application may be approved without substantial detriment to the public welfare and without substantial derogation from the intent and purposes of this ordinance. A certificate of hardship shall also be issued by the commission in the event that it fails to make a determination on an application within sixty (60) days after the filing of an application, or such further time as has been allowed in writing by the applicant.

Commission: The Watertown Historic District Commission.

To construct, construction: To build, erect, install, enlarge, move and other similar activities.

District: The Mount Auburn Street Historic District established pursuant to Massachusetts General Laws, Chapter 40C and Historic District Ordinance 0-2002-16, which is described on a plan known as "Proposed Mount Auburn Street Area, Watertown Historic District", dated March 1, 2000, filed with the Town Clerk and the South Middlesex Registry of Deeds.

Exterior architectural features: Such portion of the exterior of a building or structure as is open to view from a public street, public way, public park or public body of water, including but not limited to the architectural style and general arrangement and setting thereof, the kind, color and texture of exterior building materials, the color of paint or other materials applied to exterior surfaces and the type and style of windows, doors, lights, signs and other appurtenant exterior fixtures.

Sign: Any symbol, design, or device used to identify or advertise any place of business, product, activity or person.

Structure: A combination of materials other than a building, including a sign, fence, wall, terrace, walk or driveway, and all supporting assemblies, supporting structures, equipment and facilities ancillary or accessory to antennae and wireless communication equipment.

SIGN PERMIT APPLICATION FORM

Building Inspection Division
149 Main Street, 2nd Floor
Watertown, MA 0247
(617) 972-6480
www.watertown-ma.gov

TO BE COMPLETED BY APPLICANT

Site Address: 155 MT Auburn st.		Estimated Project Cost: $ 3700	Zoning District: ____
Owner(s): Linda Marsoubian	Phone: 781 330 3358	Tenant(s): JANIER Barbershop	
Address: 15 Ivy LANE waltham	Email:	Address: 155 MT Auburn st	
Signature(s):	Date:	Signature(s):	
Sign Erector/ Contractor: Rod Rivera		Phone/Email: 781 990 9553	
Address: 97 Beach st	Phone/Email: Rodshomeimprovement@yahoo.com		

FILL IN THE APPLICABLE PROJECT DATA BELOW (If number of proposed signs exceed the allotted space on the application, please submit all applicable information on a separate sheet.)

Tenant's Use/Proposed Use:			Is use permitted: Y/N
Attached (Identifying) Sign:	**TENANT/SIGN #1**	**TENANT/SIGN #2**	**TENANT/SIGN #3**
1. Proposed Sign Area	30 Sq. Ft.	Sq. Ft.	Sq. Ft.
2. Occupant Façade Area	67.5 Sq. Ft.	Sq. Ft.	Sq. Ft.
3. Sign Area/ Façade Area (%age)	20 %	%	%

Accessory Signs:	
1. Existing/Proposed Identifying Sign	Sq. Ft.
2. Proposed Accessory Sign	Sq. Ft.
3. Accessory Sign/ Primary Sign	%
Detached/Free Standing Sign	
1. Aggregate Sign Area	Sq. Ft.
2. Setback(s); (F)ront, (S)ide, (R)ear.	F: ____; S1: ____; S2: ____; R: ____
3. Height	Ft.
Other:	
1. Total # of Signs on the Building	
2. Total Cumulative Signage	Sq. Ft.

TO BE COMPLETED BY STAFF

Permit Fee(s): $ 235

(Sign Permit Fee(s): $50.00 base fee plus $5 per $100 of estimated cost,. Checks or Money Orders are acceptable and payable to the Town of Watertown.)

APPROVALS:

Zoning Office: Signature: _____ Date: _____

Planning Division: Signature: _____ Date: _____

Building Division Signature: _____ Date: _____

THIS APPLICATION MUST BE SUBMITTED TO THE BUILDING DIVISION (See Reverse)

The ZONING ORDINANCE can be found online at: www.watertown-ma.gov

SUBMITTAL REQUIREMENTS

☑ Completed and Signed Application

☐ Two (2) Copies of Plans, which include:

For Attached Signs:

1. Dimensioned site Plan indicating location of the proposed sign(s) and setbacks if applicable.
2. Dimensioned elevations of the Building(s) and occupancy frontage(s) including the proposed location of the sign on the frontage.
3. Dimensioned detail of the sign including materials/ colors and lighting source (if applicable).

For Detached Signs:

1. Dimensioned site plan identifying the location of the proposed detached sign and setbacks.
2. Dimensioned elevations of the proposed sign.
3. Dimensioned detail of the sign including materials/ colors and lighting source (if applicable).

☐ In the case of any projecting sign, symbol or banner, liability insurance in an amount to be determined by the Town of Watertown to be appropriate (which in no case shall be less than $250,000/$500,000 personal injury and $50,000 property damage) shall be carried by the owner of said sign and a certification of the same shall be filed with the application.

BASIC SIGN REGULATIONS

See the Watertown Zoning Ordinance, Article VII, for additional sign regulations

Calculation of sign area in Commercial and Industrial Zoning Districts:

(1) For a ATTACHED wall or marquee **Identifying Sign**, the calculation of sign area in the commercial and industrial districts shall be a percentage of the building facade. The dimensions used in calculating this percentage shall be the horizontal measure of the frontage of the business and the vertical measure not exceeding the top of the second story of a building (*building façade area*);

(2) An ATTACHED wall or marquee sign, said **Identifying Sign** may be up to five (5) percent of the area of the wall or *building façade area*. In the case of a single story structure, an identifying wall or marquee sign may be up to ten (10) percent of the area of the wall or *building façade area*; however, this option excludes the use of any accessory sign(s);

(3) One Accessory Sign is allowed for each use. In no instance may the total area of an **Accessory Sign** exceed thirty (30) percent of the total area of the **Identifying Sign** for each occupant;

(4) Maximum total aggregate sign area for a single building is 200 square feet.

Calculation of sign area in Residential Zoning Districts:

(1) One identifying sign displaying the street number or name of the occupant of the premises, or both, not exceeding two (2) square feet in area. Such sign may include identification of a permitted accessory professional use and identify other permitted accessory uses including a customary home occupation;

(2) One identifying sign for permitted non-conforming use, not exceeding ten (10) square feet in area in the S-10, S-6, SC, CR, T and OSC Districts and twenty (20) square feet in the R.75, R1.2, and residential uses in the I-3 District;

(3) Two identification signs are permitted on each building for churches and institutions, one not exceeding twenty (20) square feet in area and one not exceeding ten (10) square feet in area;

(4) For multiple unit structures in the R.75 and R1.2 Districts, up to two (2) identifying signs indicating the name of the individual multiple unit structure(s) and/or the street address, wherein the aggregate area of the sign(s) shall not exceed twenty square feet.

Calculating Detached/Free Standing Signage:

(1) Monument ground sign is a sign that is anchored directly on the ground, not exceeding 32 square feet in gross area, nor 4' in height and which shall be externally illuminated;

(2) One free standing pylon/pole sign may be permitted in the Industrial Zoning Districts for the purpose of a **business directory** provided that no more than three (3) square feet shall be permitted thereon for each use. The aggregate sign area shall not exceed fifteen (15) square feet;

(3) A free standing pole or pylon shall not exceed twenty (20) feet above ground level and may be up to a TOTAL of 16 square feet in area, provided the sign conforms to all other applicable regulations.

THIS APPLICATION MUST BE SUBMITTED TO THE BUILDING DIVISION

The ZONING ORDINANCE can be found online at: www.watertown-ma.gov

PRIOR TENANT

PROPOSED TENANT

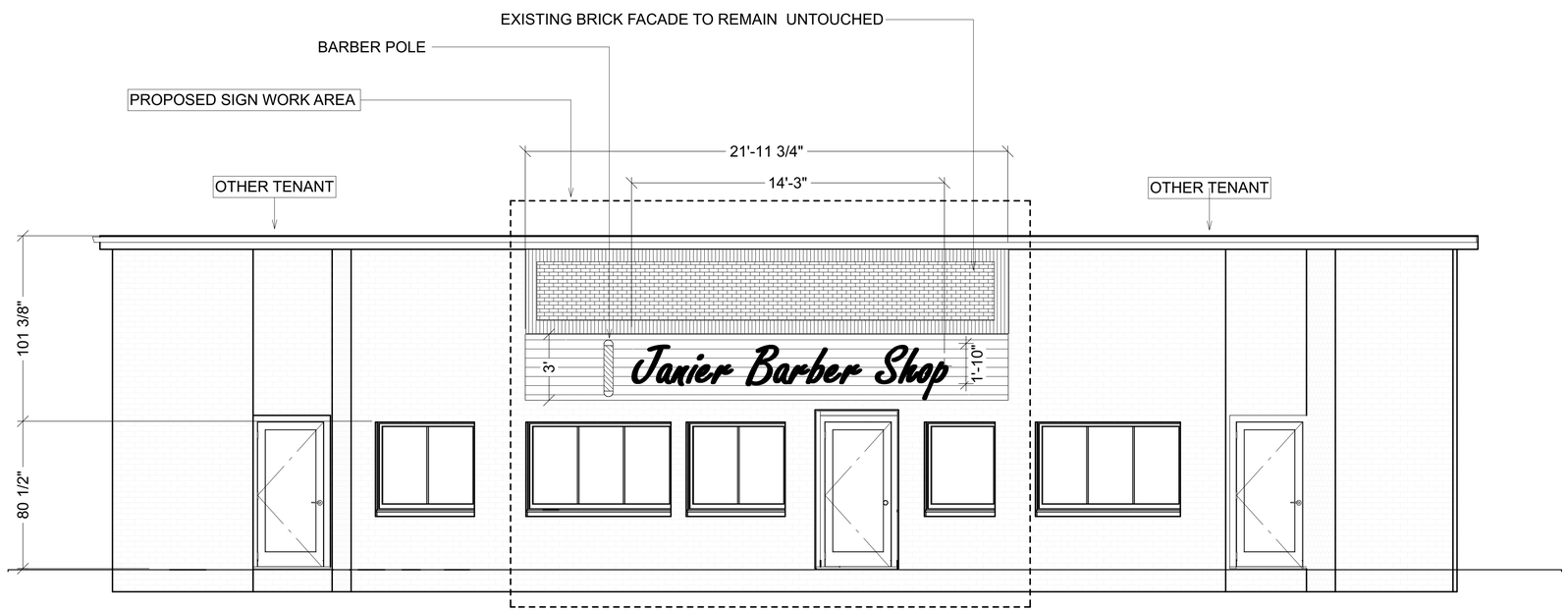

A-2
1

PROPOSED SIGN ELEVATION

1/4"=1'

REVISION TABLE

NUMBER	DATE	REVISED BY	DESCRIPTION

PROJECT TITLE:
PROJECT TITLE
PAGE TITLE:

JANIER BARBER SHOP
155A MT AUBURN STREET
WATERTOWN, MA 02472

DRAWINGS PROVIDED BY:

ROD RIVERA
BIBIANA GONZALEZ VIANA
C/S & DESIGNERS
781-389-2901

COPYRIGHT NOTE:
THESE PLANS ARE PROTECTED UNDER THE COPYRIGHT LAWS OF THE UNITED STATES. THE REPRODUCTION, DISTRIBUTION, ADAPTATION, PUBLIC DISPLAY, OR PUBLIC PERFORMANCE OF THE PLANS MAY RESULT IN SEVERE CIVIL AND CRIMINAL PENALTIES, AND WILL BE PROSECUTED TO THE MAXIMUM EXTENT POSSIBLE UNDER THE LAW. THE PLANS ENGRAVED ARE THE PROPERTY OF THE DESIGNER AND MUST NOT BE REPRODUCED IN ANY MANNER, OR ARE THEY TO BE ASSIGNED TO ANY THIRD PARTY WITHOUT THE WRITTEN CONSENT OF THE DESIGNER.
UNAUTHORIZED USE MAY ALSO VIOLATE THE CONSUMER PROTECTION LAWS OF THE STATE OF MASSACHUSETTS.
IT IS ILLEGAL TO USE THESE PLANS TO CONSTRUCT ANY BUILDING WITHOUT THE PRIOR WRITTEN CONSENT OF THE DESIGNER.
PLEASE CONTACT US FOR PERMISSION.

DATE:
1/31/2022

SCALE:
1/4' = 1'

SHEET:
A - 2

14'-6"

Janier Barber Shop

2'-4 1/8"

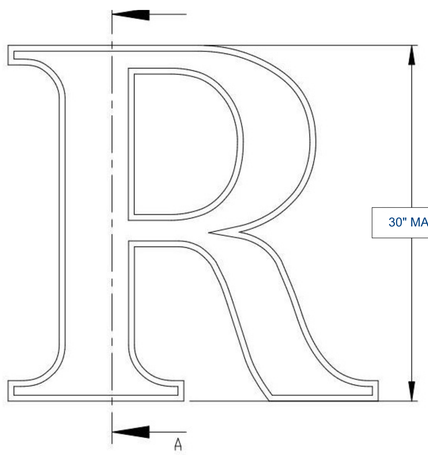

FRONT VIEW II SCALE 1:5

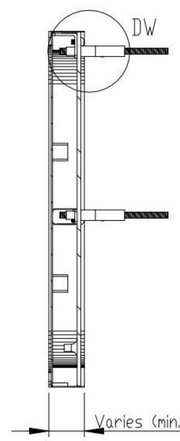

SECTION A-A II SCALE 1:5

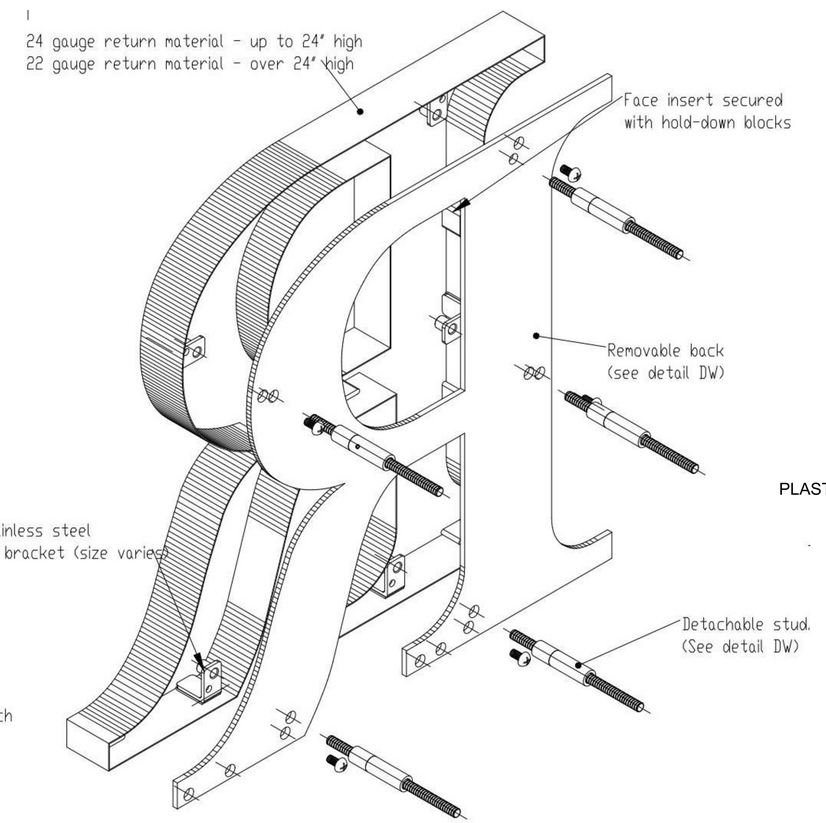

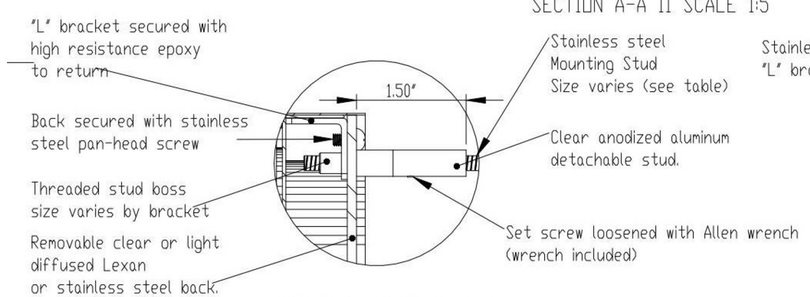

DETAIL DW II SCALE 1 : 2

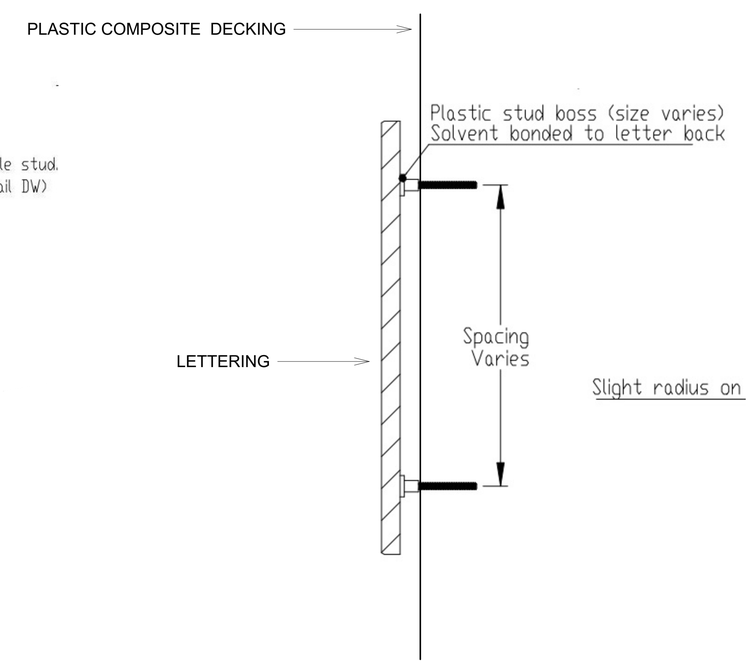

INSERT OPTIONS	
Stainless steel	18-20 gauge up to 24" high
	16-18 gauge over 24" to 36" high
Acrylic	3/16" thick - up to 36" high

NOTES:
- Metal back - Pan-head screw slightly recessed.
- Lexan back - 6 - 24" 0.118" thick, over 24" 0.236" th
- Tie back required (not supplied) on letters > 8" high

MATERIAL OPTIONS
Standard - 304 prefinished stainless steel
Optional - 316 prefinished stainless steel (more corrosion resistar
- 304 prefinished stainless with titanium coating

REVISION TABLE

NUMBER	DATE	REVISED BY	DESCRIPTION

PROJECT TITLE:
PROJECT TITLE
PAGE TITLE:

JANIER BARBER SHOP
155A MT AUBURN STREET
WATERTOWN,MA 02472

DRAWINGS PROVIDED BY:
ROD RIVERA
BIBIANA GONZALEZ VIANA
C/S & DESIGNERS
781-389-2901

COPYRIGHT NOTE:
THESE PLANS ARE PROTECTED UNDER THE COPYRIGHT LAWS OF THE UNITED STATES. THE REPRODUCTION, DISTRIBUTION, ADAPTATION OR PUBLICATION OF THESE PLANS WITHOUT THE EXPRESS WRITTEN PERMISSION OF THE ARCHITECT IS PROHIBITED. THESE DRAWINGS ARE THE PROPERTY OF THE ARCHITECT AND MUST BE RETURNED TO THE ARCHITECT UPON REQUEST. THESE DRAWINGS MAY NOT BE REPRODUCED OR CHANGED IN ANY FASHION WITHOUT THE EXPRESS WRITTEN PERMISSION OF THE ARCHITECT. THE ARCHITECT ASSUMES NO RESPONSIBILITY FOR CHANGES MADE TO THESE DRAWINGS WHICH ARE NOT SEALED BY THE ARCHITECT. CONTACT THE ARCHITECT FOR ADDITIONAL INFORMATION REGARDING COPYRIGHT LAWS.

DATE:
2/4/2022

SCALE:
1/4' = 1'

SHEET:
A - 2

Solar PV installation

Examples in Watertown and information on Marshall Place

Solar installations in Watertown

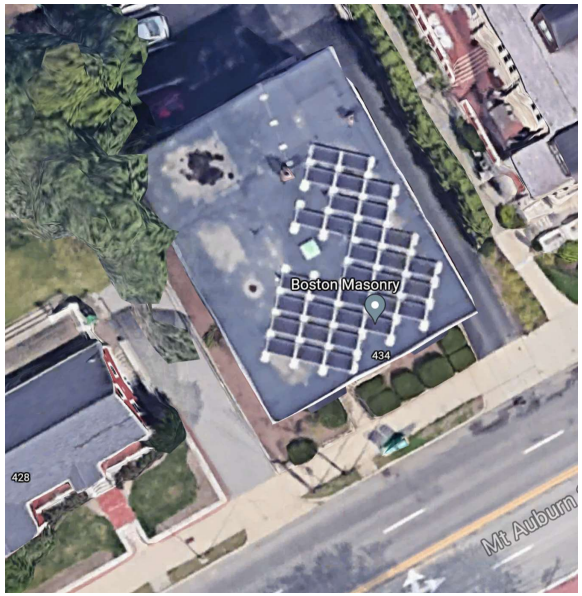

434 Mt. Auburn St. streetview and rooftop view

Solar installations in Watertown

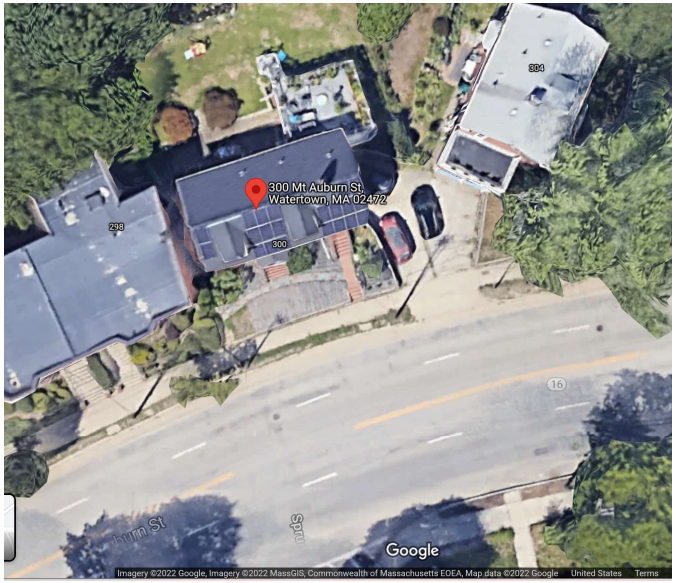

300 Mt. Auburn St. streetview and rooftop view

Solar installations in Watertown

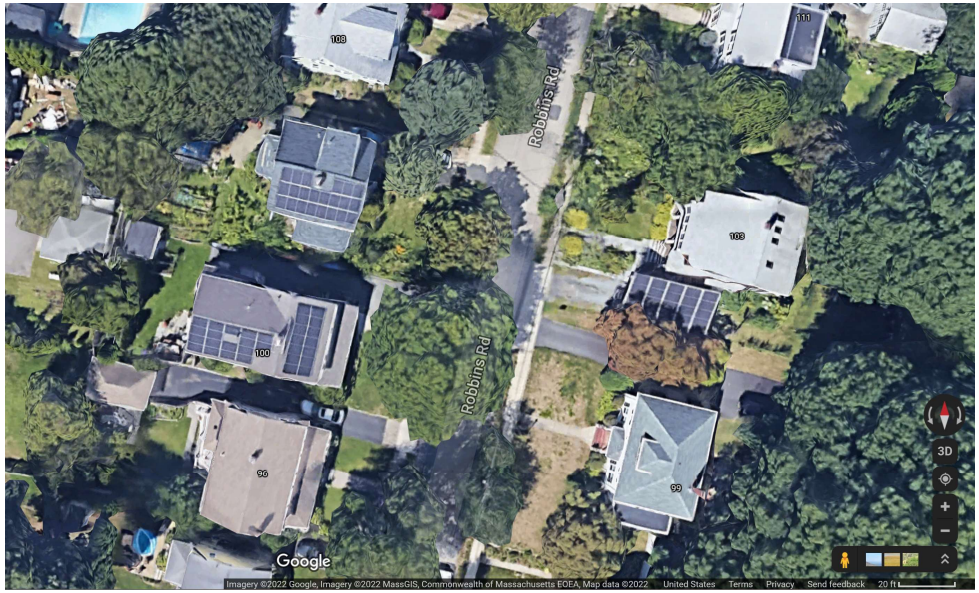

100,102, 103 Robbins Road -streetview (103 only) and rooftop view

Solar installations in Watertown

34 Otis Street -streetview and rooftop view

Marshall Place

120 Mt. Auburn streetview

Marshall Place

Historic Design Considerations:

- Panels on the upper-level hip roof **are above the Mansard roof** and not likely to be visible from street level unless viewed from far away.
- Rectangles show approximate area where panels will be installed.
- Resonant can install a less contrasting all-black panel on upper part of mansard roof upon request.
- Inverter equipment will not be placed on building facades that are street facing.

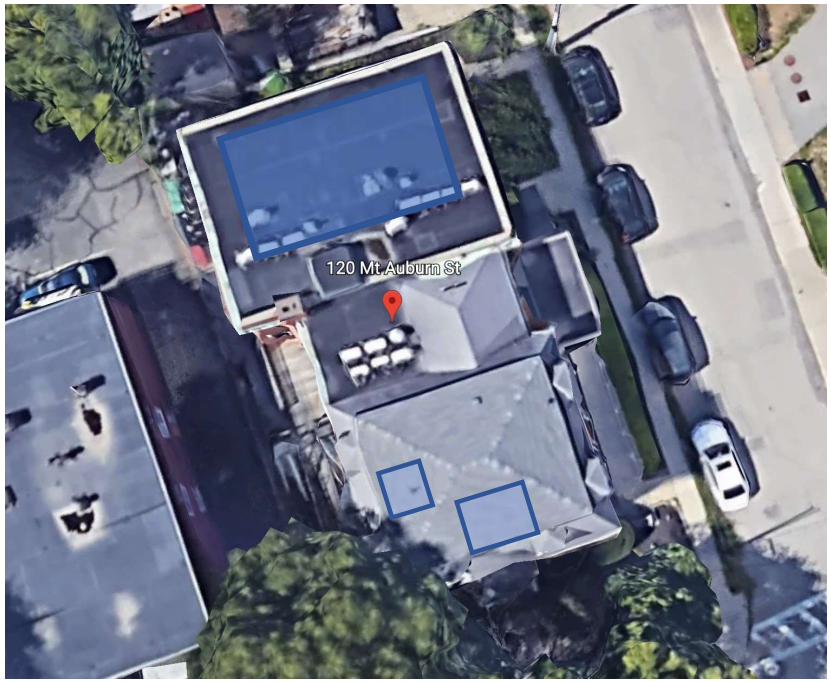

120 Mt. Auburn rooftop view

Historic Installations by Resonant Energy